Arduino bare bone PCB

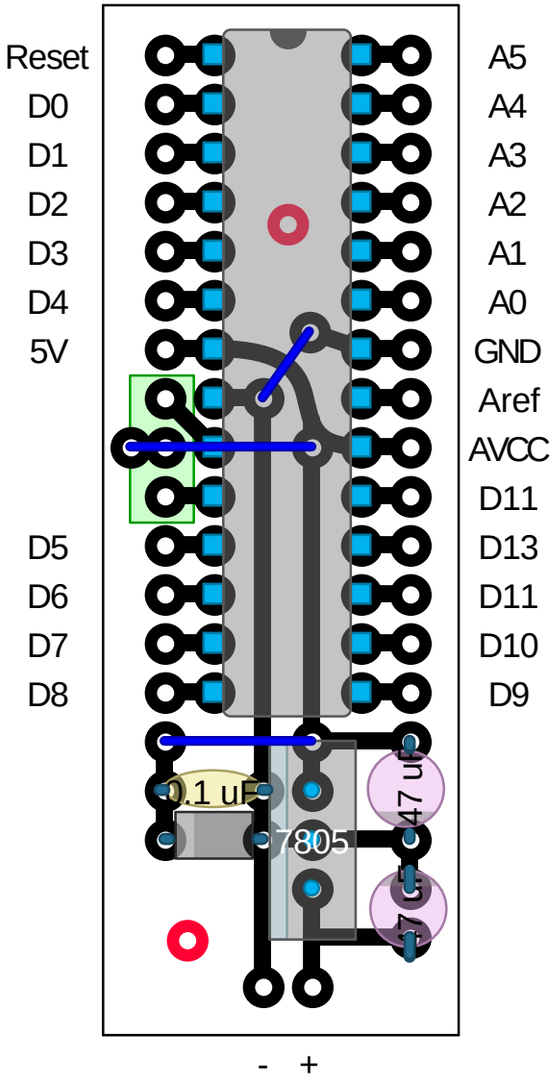
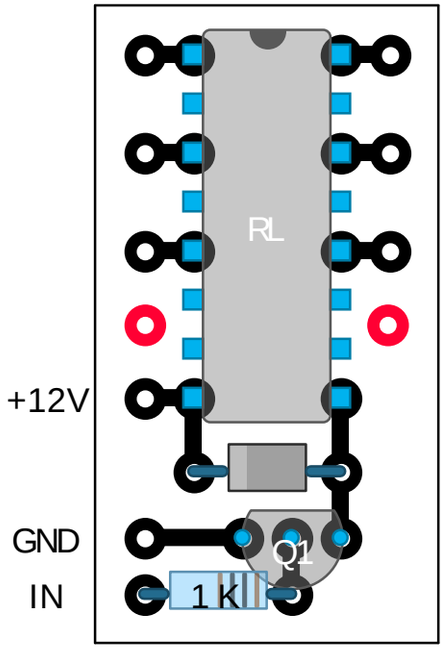
Relay board